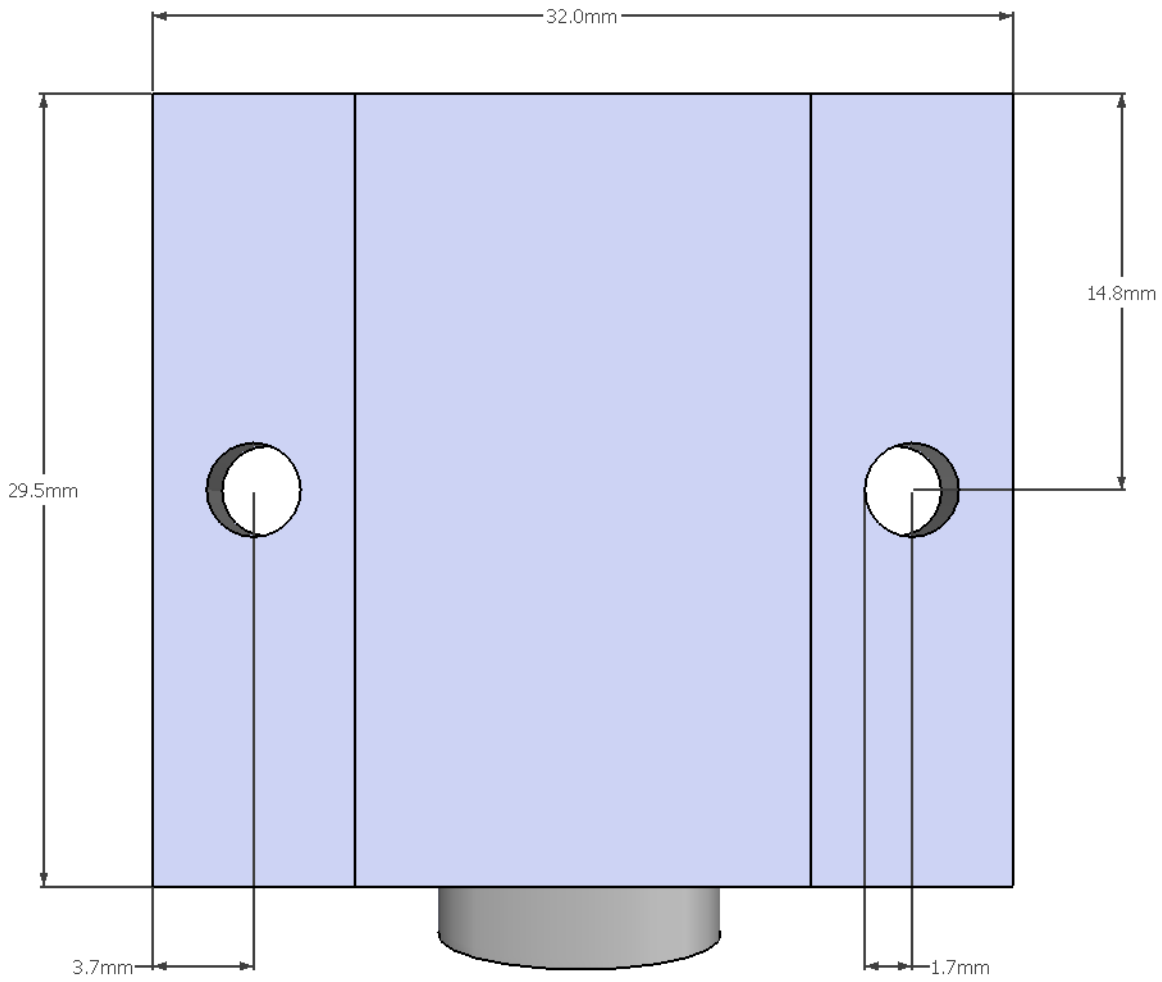
32.0mm
14.8mm
29.5mm
3.7mm
1.7mm

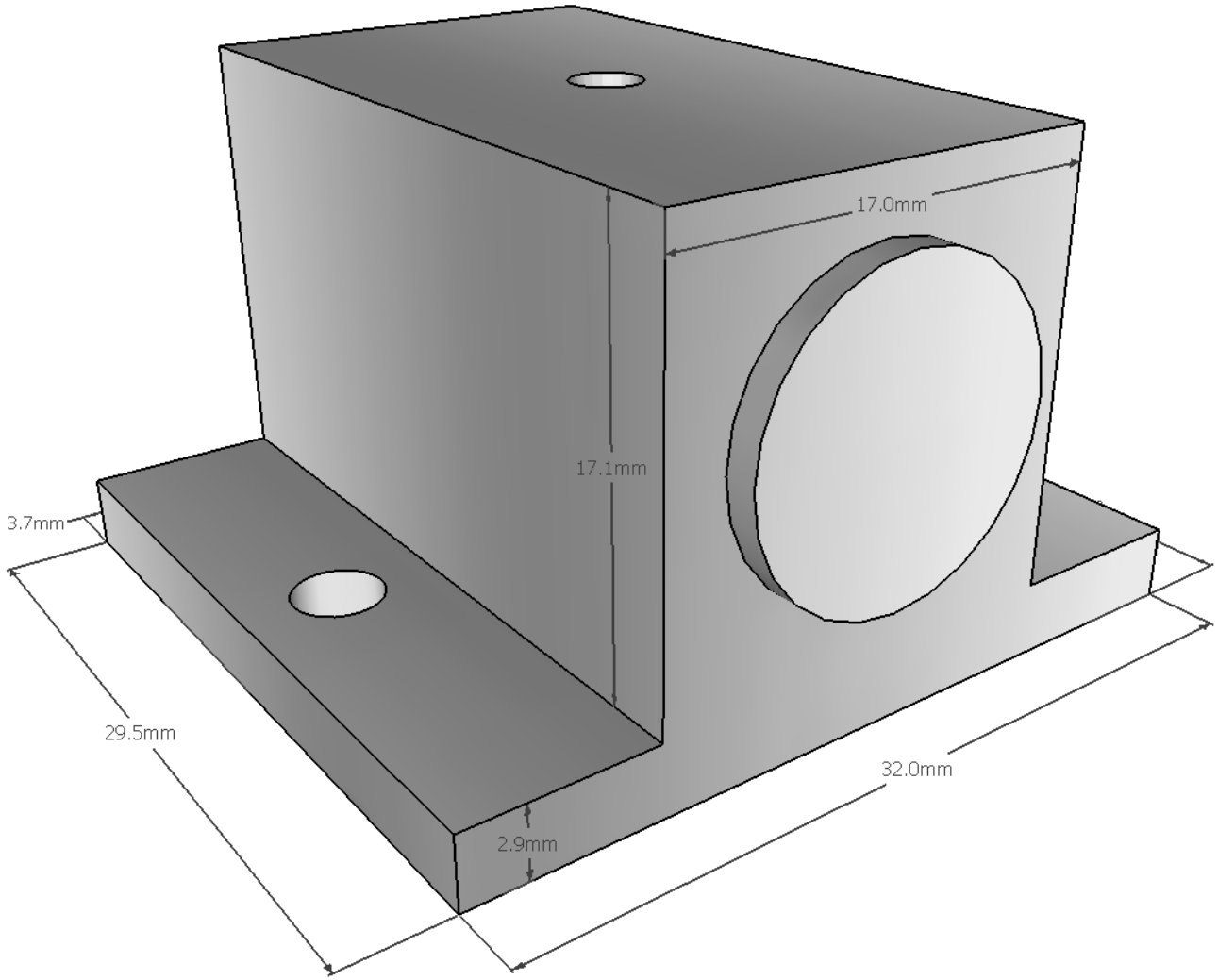
17.0mm
17.1mm
3.7mm
29.5mm
32.0mm
2.9mm